Ausführungsvarianten für Muffe Innenrohr

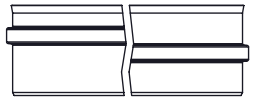

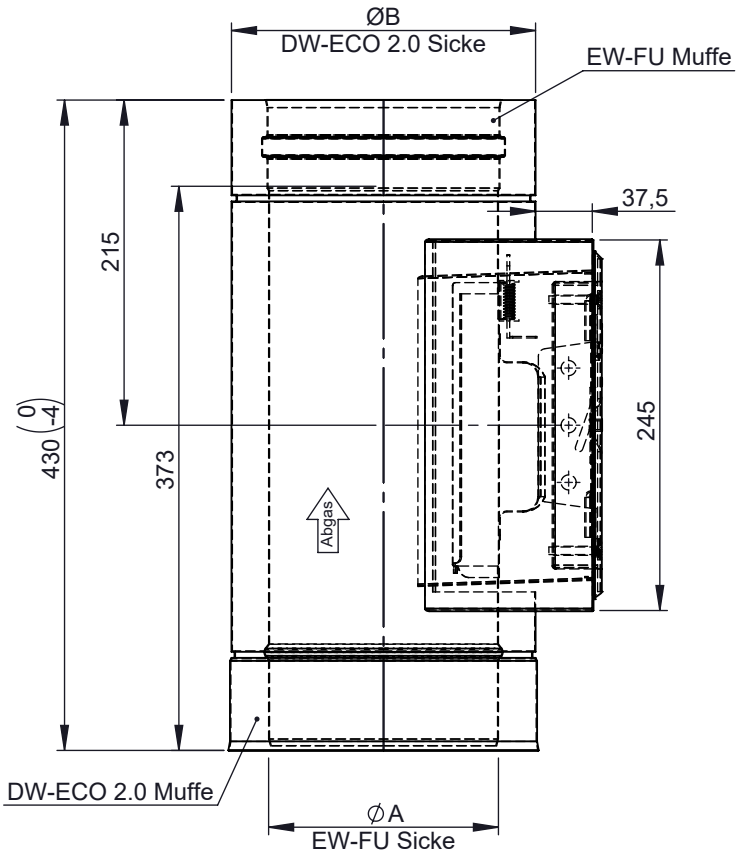

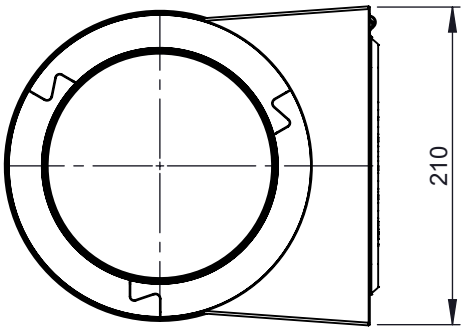

M 1:8 (Ø150)

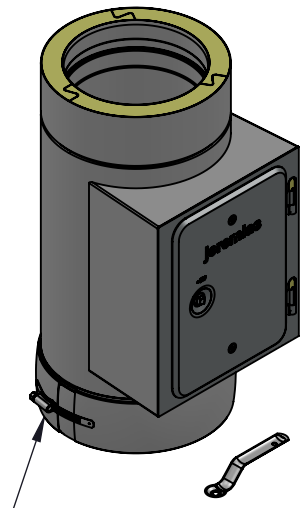

inkl. Systemklemmband

Ø	80	100	115	120	130	150	160	180	200	225	250	300	350	400	450	500	550	600
A	80	100	115	120	130	150	160	180	200	225	250	300	350	400	450	500	550	600
B	130	150	165	170	180	200	210	230	250	275	300	350	400	450	500	550	600	650
kg	3,3	3,5	3,8	3,9	4,0	4,4	4,6	4,8	5,1	5,5	5,9	6,8	8,4	9,3	10,3	11,2	12,2	13,2

notes:

DIN ISO 13920 Tolerances B

revisions-no. A1 | mm / kg

	date	name
drawn by	24.08.2021	KSA
checked by		
approved by		
modified by	18.01.2022	KSA

jeremias® CHIMNEY SYSTEMS

description: Revisionselement (bis 600°C/N1), eckige Öffnung 210x140mm inkl. Klemmband

code: **215-DWECO10**

drawing-no.: **01-02-35-1650-215**

scale: 1:5

format: A4

sheet: 1 of 1

© jeremias GmbH. All rights reserved, also regarding any disposal, exploitation, editing, distribution, as well as in the event of applications for industrial property rights.